OPERATIONAL AMPLIFIERS

OpAmp, Op Amp, or Operational Amplifier – a complex device that may be modeled as a voltage-controlled voltage source with high gain, high input impedance, and low output impedance.

Terminal Nomenclature

Inputs: (+) terminal and (-) terminal
(sometime called the noninverting and inverting , respectively)

Outputs: V_o or v_o with respect to the circuit reference

Power terminals (not shown in the model): constant voltages V_+ and V_-
(sometimes called the rail voltages)

Circuit Model

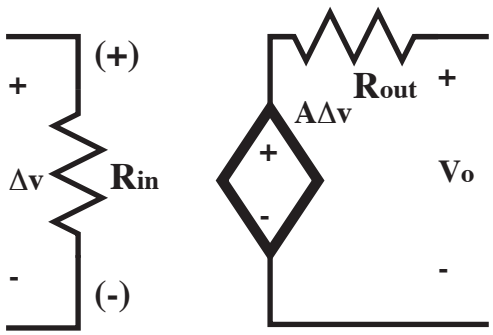

Integrated circuits with multi-transistors on chip are available with single or multiple OpAmps available.

Circuit Symbol

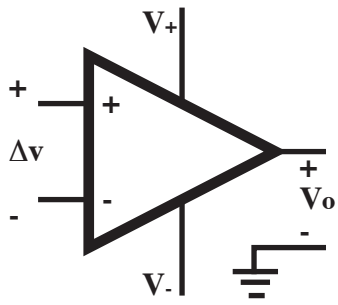

Example Chip Layout

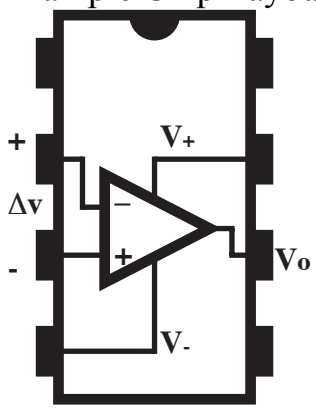

OPAMP PARAMETERS

OpAmp Parameters

Voltage Gain $A = V_o/\Delta v$	(typically large $A \geq 10{,}000$)
Input Resistance R_{in}	(typically large $R_{in} \geq 100\ k\Omega$)
Output Resistance R_{out}	(typically small $R_{out} \leq 100\ \Omega$)

Output Characteristic

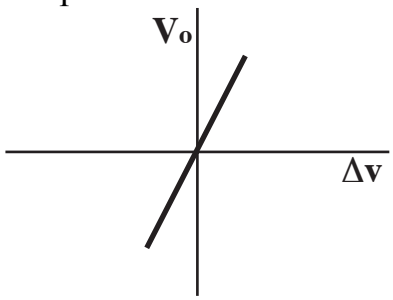

Practical Output Characteristic

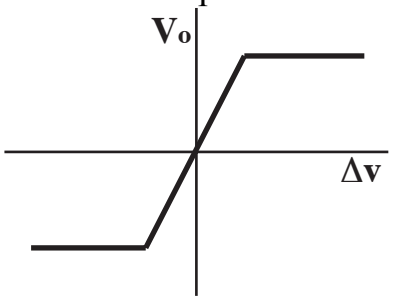

Feedback – the typical usage of OpAmps involves feedback from the output to the input terminals.

OpAmp

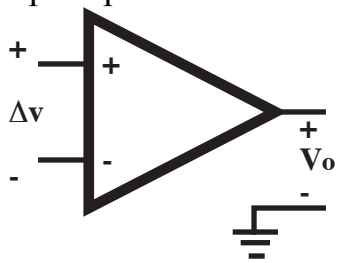

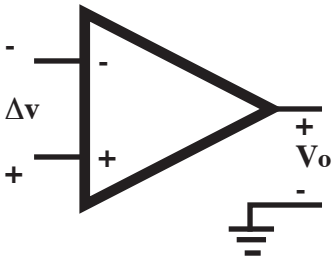

Negative Feedback – the output is connected (perhaps through various circuit elements) to the (-) terminal. Produces a stable output as Δv goes to zero.

Positive Feedback – the output is connected (perhaps through various circuit elements) to the (+) terminal. Produces a unstable behavior, e.g. overload or oscillation.

IDEAL OPAMP PARAMETERS

Ideal OpAmp Parameters

Infinite Voltage Gain $A = V_o/\Delta v = \infty$

Infinite Input Resistance $R_{in} = \infty\ \Omega$

Zero Output Resistance $R_{out} = 0\ \Omega$

Ideal OpAmp

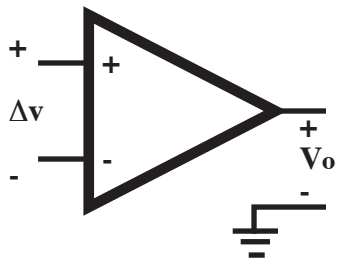

Ideal Circuit Model

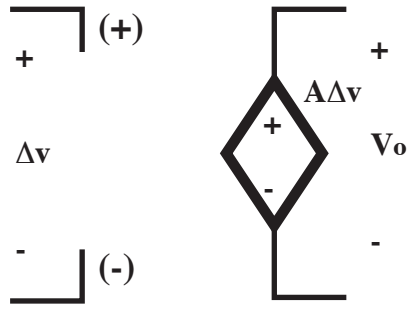

Circuit Analysis with Ideal OpAmps

Assume output voltage is in the linear range (check final result)

Assume infinite input resistance $R_{in} = \infty\ \Omega$

(**open circuit for no input current**)

Assume zero output resistance $R_{out} = 0\ \Omega$ (short circuit)

Assume $\Delta v = 0$ V (for negative feedback)

or (better)

Use dependent voltage source with a gain of A, let A go to infinity in the solution.

OpAmp circuits are typically designed such that the circuit behavior (e.g. through feedback) is dependent on external elements values and not on the OpAmp gain parameter.

The internal design and frequency analysis of OpAmps are beyond the scope of this class.

BUFFER OPAMP CIRCUIT AND ANALYSIS

Buffer (or Voltage Follower) OpAmp Circuit

- Input voltage to (+) terminal
- Output feedback to (-) terminal

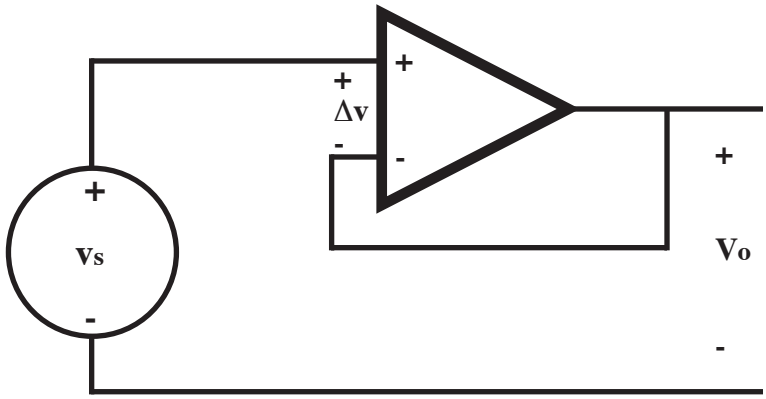

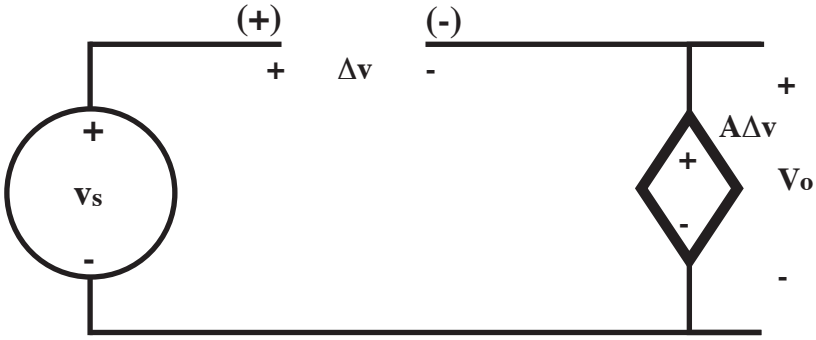

Kirchhoff's-Voltage-Law:

$$- v_S + \Delta v + A\Delta v = 0 \quad \text{or} \quad \Delta v = v_S/(1 + A)$$

and

$$v_o = A\Delta v = v_S/[(1/A) + 1]$$

$$\lim_{A \text{ to } \infty} v_o = \lim_{A \text{ to } \infty} v_S/[(1/A) + 1] = v_S$$

$$\lim_{A \text{ to } \infty} v_o/v_S = \lim_{A \text{ to } \infty} 1/[(1/A) + 1] = 1$$

In the limit

$$v_o/v_S = 1$$

Note that the output voltage does not depend on the load attached to the output.

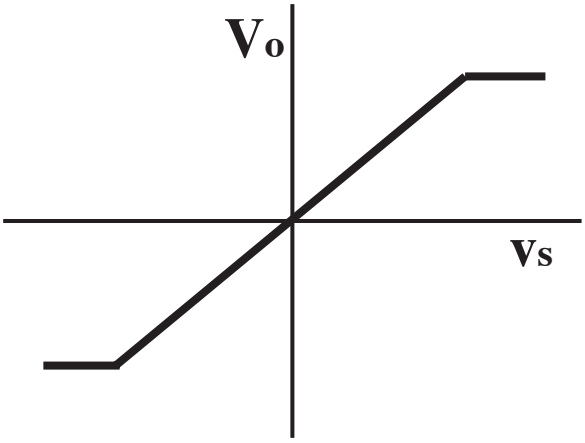

NON-INVERTING OPAMP CIRCUIT AND ANALYSIS

Non-inverting OpAmp Circuit

- Input voltage to (+) terminal
- Output feedback to (-) terminal through a resistive network

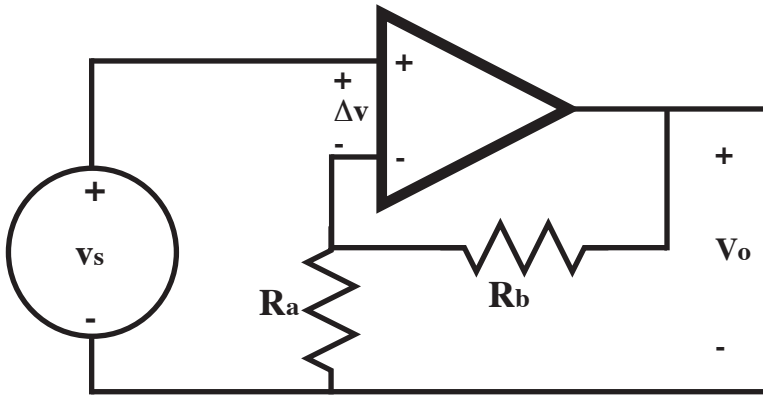

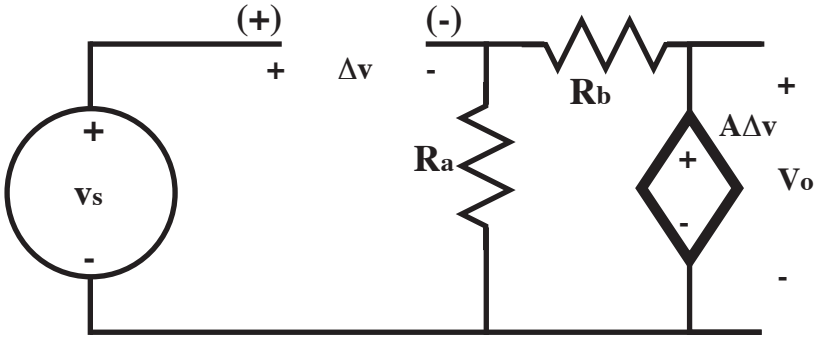

Let v_a be the voltage across R_a

Kirchhoff's-Voltage-Law for the left-hand loop:

$$- v_S + \Delta v + v_a = 0 \quad \text{or } v_a = - \Delta v + v_S = - v_o/A + v_S$$

Voltage division for the right-hand loop: (Note that the OpAmp input current is zero)

$$v_a = [R_a /(R_a + R_b)]\, v_o$$

Hence,

$$v_a = - v_o/A + v_S = [R_a/(R_a + R_b)]\, v_o$$

$$v_S = [1/A + R_a/(R_a + R_b)]\, v_o$$

$$v_o/v_S = [1/A + R_a/(R_a + R_b)]^{-1}$$

$$\lim_{A \text{ to } \infty} v_o/v_S = (R_a + R_b)/R_a$$

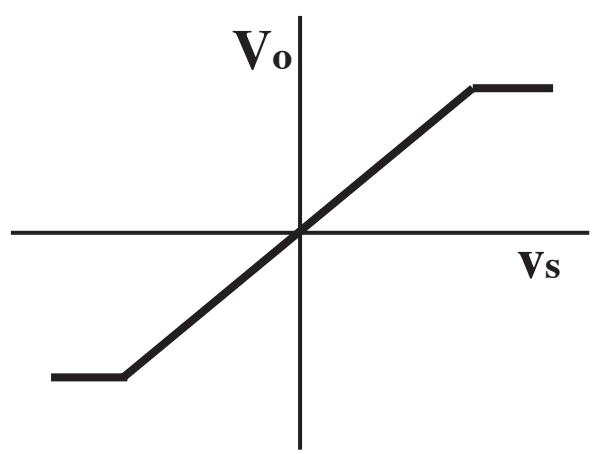

In the limit

$$v_o/v_S = (R_a + R_b)/R_a$$

$$v_o/v_S = 1 + R_b/R_a$$

INVERTING OPAMP CIRCUIT AND ANALYSIS

Inverting OpAmp Circuit

- Input voltage and output feedback to (-) terminal through a resistive network
- Reference to (+) terminal

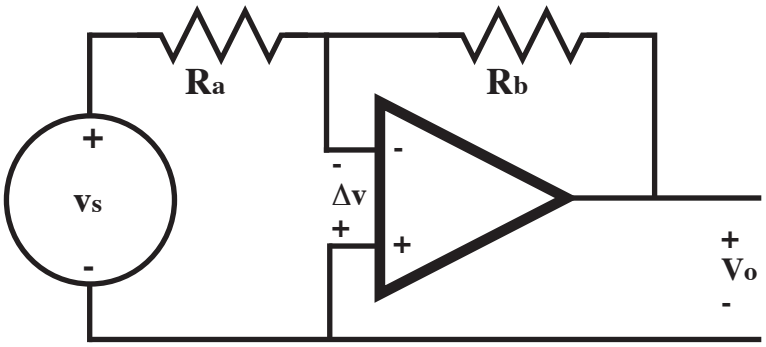

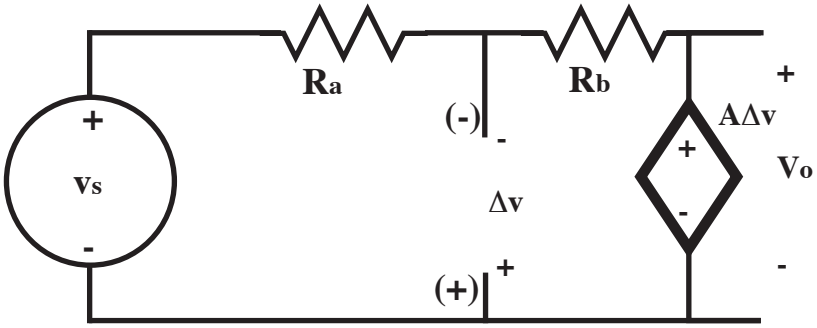

Kirchhoff's-Current-Law for the (-) terminal:

(Note that the OpAmp input current is zero)

$(-\Delta v - v_S)/R_a + (-\Delta v - v_o)/R_b = 0$ and $\Delta v = v_o/A$

$(-v_o/A - v_S)/R_a + (-v_o/A - v_o)/R_b = 0$

Hence,

$v_S/R_a = (-1/AR_a - 1/AR_b - 1/R_b)v_o = (-1/A)[(R_b + R_a + AR_a)/R_aR_b]v_o$

$v_o/v_S = -R_b/[(R_b + R_a)/A + R_a]$

$\lim_{A \text{ to } \infty} v_o/v_S = -R_b/R_a$

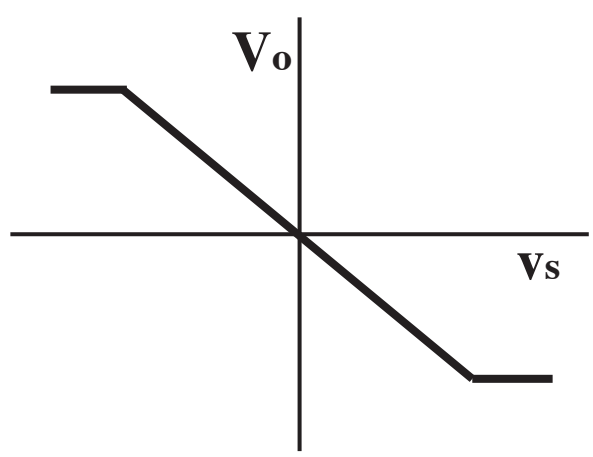

In the limit

$v_o/v_S = -R_b/R_a$

SUMMING AND INVERTING OPAMP CIRCUIT AND ANALYSIS

Summing and Inverting OpAmp Circuit

- Input voltages and output feedback to (-) terminal through a resistive network
- Reference to (+) terminal

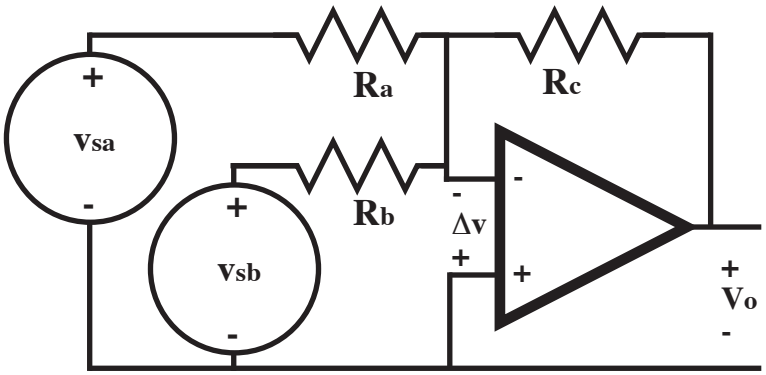

Kirchhoff's-Current-Law for the (-) terminal:

(Note that the OpAmp input current is zero)

$(-\Delta v - v_{Sa})/R_a + (-\Delta v - v_{Sb})/R_b + (-\Delta v - v_o)/R_c = 0$

with $\Delta v = v_o/A$

$(-v_o/A - v_{Sa})/R_a + (-v_o/A - v_{Sb})/R_b + (-v_o/A - v_o)/R_c = 0$

Hence,

$v_{Sa}/R_a + v_{Sb}/R_b = (-1/AR_a - 1/AR_b - 1/AR_c - 1/R_c)v_o$

$v_{Sa}/R_a + v_{Sb}/R_b = (-1/A)[(R_bR_c + R_aR_c + R_aR_b + AR_aR_b)/R_aR_bR_c]v_o$

$v_o = -R_bR_c/[(R_bR_c + R_aR_c + R_aR_b)/A + R_aR_b]\, v_{Sa}$

$\quad - R_aR_c/[(R_bR_c + R_aR_c + R_aR_b)/A + R_aR_b]\, v_{Sb}$

$\lim_{A \text{ to } \infty} v_o = -[R_bR_c/(R_aR_b)]\, v_{Sa} - [R_aR_c/(R_aR_b)]\, v_{Sb}$

$\lim_{A \text{ to } \infty} v_o = -[R_c/R_a]\, v_{Sa} - [R_c/R_b]\, v_{Sb}$

In the limit

$v_o = -[R_c/R_a]\, v_{Sa} - [R_c/R_b]\, v_{Sb}$

The same approach will work for three or more inputs.

SUBTRACTOR OPAMP CIRCUIT AND ANALYSIS

Subtractor OpAmp Circuit

- Input voltage and output feedback to (-) terminal through a resistive network
- Second input voltage and reference to (+) terminal

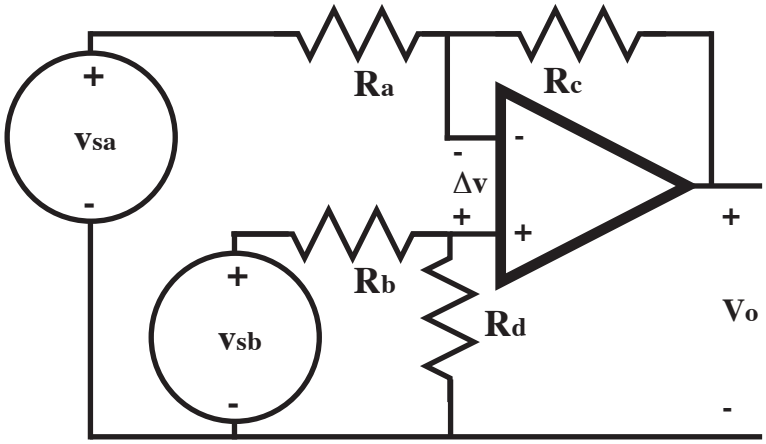

Apply superposition considering v_{Sa} and v_{Sb} separately

For v_{Sa} with $v_{Sb} = 0$

No current flows in the R_b and R_d resistors and

The circuit is equivalent to the inverting amplifier with

$v_{oa} = - [R_c/R_a]\ v_{Sa}$ (In the limit A to ∞)

For v_{Sb} with $v_{Sa} = 0$

The voltage at the (+) terminal by voltage division is

$v_+ = [R_d /(R_b + R_d)]\ v_{sb}$

The circuit is equivalent to the non-inverting amplifier with

$v_{ob} = [(R_a + R_c)/R_a]\ v_+ = [(R_a + R_c)/R_a]\ [R_d /(R_b + R_d)]\ v_{sb}$

or

$v_{ob} = \{[1 + (R_c/R_a)] / [1 + (R_b/R_d)]\}\ v_{sb}$ (In the limit A to ∞)

Then by superposition

$v_o = v_{oa} + v_{ob} = - [R_c/R_a]\ v_{Sa} + \{[1 + (R_c/R_a)] / [1 + (R_b/R_d)]\}\ v_{sb}$

VOLTAGE-TO-CURRENT CONVERTER OPAMP CIRCUIT

Voltage-to-Current Converter OpAmp Circuit

- Input voltage to (+) terminal
- Output feedback to (-) terminal through a resistive network
- Load resistor in feedback loop

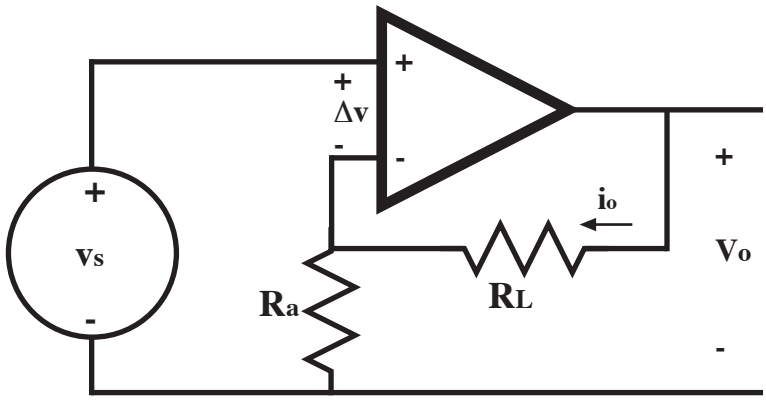

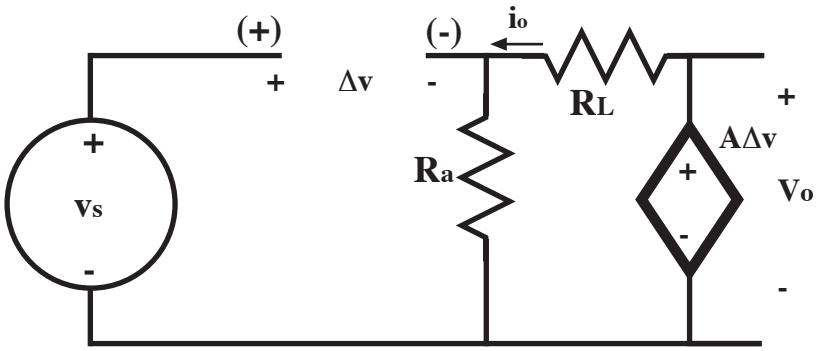

Let v_a be the voltage across R_a

Kirchhoff's-Voltage-Law for the left-hand loop: ($\Delta v = v_o/A$)

$$- v_S + \Delta v + i_L R_a = 0 \quad \text{or} \quad i_L R_a = - \Delta v + v_S = - v_o/A + v_S$$

(Note that the OpAmp input current is zero)

Then

$$i_L = - v_o/AR_a + v_S/R_a = - i_L/[AR_a/(R_a + R_L)] + v_S/R_a$$

$$i_L\{1 + 1/[AR_a/(R_a + R_L)]\} = + v_S/R_a$$

$$i_L = + v_S/\{R_a + 1/[A/(R_a + R_L)]\}$$

Hence,

$$\lim_{A \text{ to } \infty} i_L/v_S = \lim_{A \text{ to } \infty} 1/\{R_a + 1/[A/(R_a + R_L)]\} = 1/R_a$$

In the limit

$$i_L/v_S = 1/R_a \quad \text{or} \quad i_L = + v_S/R_a$$

HALF-WAVE RECTIFIER OPAMP CIRCUIT

Half-Wave Rectifier OpAmp Circuit

- Reference to (+) terminal
- Input voltage and output feedback to (-) terminal through a resistive and diode network

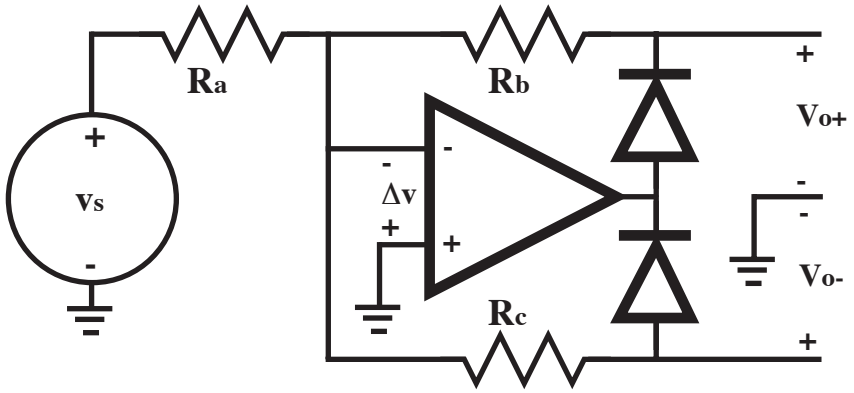

Differing behavior for $v_S > 0$ and $v_S < 0$

For $v_S > 0$

The upper diode in "off" and the lower diode is "on"

No current flows in the R_b resistor so

$v_{o+} = 0$

The other output is equivalent to the inverting amplifier with

$v_{o-} = - [R_c/R_a]\ v_S$ (In the limit A to ∞)

For $v_S < 0$

The upper diode in "on" and the lower diode is "off"

No current flows in the R_c resistor so

$v_{o-} = 0$

The other output is equivalent to the inverting amplifier with

$v_{o+} = - [R_b/R_a]\ v_S$ (In the limit A to ∞)

INTEGRATING OPAMP CIRCUIT AND ANALYSIS

Integrating OpAmp Circuit

- Input voltage and output feedback to (-) terminal through a resistive and capacitive network
- Reference to (+) terminal

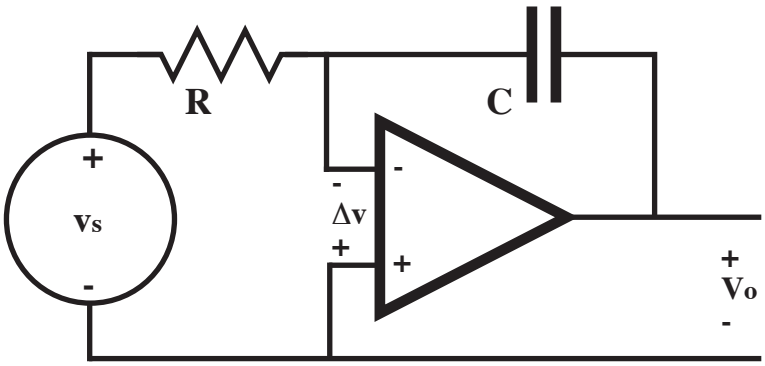

The negative feedback drives Δv to zero.

Kirchhoff's-Current-Law for the (-) terminal:

(Note that the OpAmp input current is zero)

$(-\Delta v - v_S)/R + Cd(-\Delta v - v_o)/dt = 0$ with $\Delta v = 0$

$(-v_S)/R + C\, d(-v_o)/dt = 0$

$v_S = -RC\, d(v_o)/dt$

Hence,

$v_o = -(1/RC)\int(v_S)d\tau$

DIFFERENTIATING OPAMP CIRCUIT AND ANALYSIS

Differentiating OpAmp Circuit

- Input voltage and output feedback to (-) terminal through a resistive and capacitive network
- Reference to (+) terminal

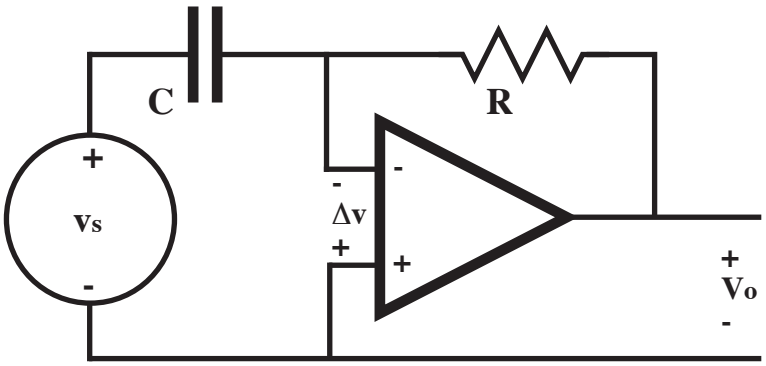

The negative feedback drives Δv to zero.

Kirchhoff's-Current-Law for the (-) terminal:

(Note that the OpAmp input current is zero)

$Cd(-\Delta v - v_S)/dt + (-\Delta v - v_o)/R = 0$ with $\Delta v = 0$

$Cd(-v_S)/dt + (1/R)(-v_o) = 0$

$-RCd(v_S)/dt = v_o$

Hence,

$v_o = -(RC)\, d(v_S)/dt$

MULTIPLE OPAMP CIRCUIT AND ANALYSIS

Two-Stage Circuit with Multiple OpAmps

- Output feedback to (-) terminal through a resistive network

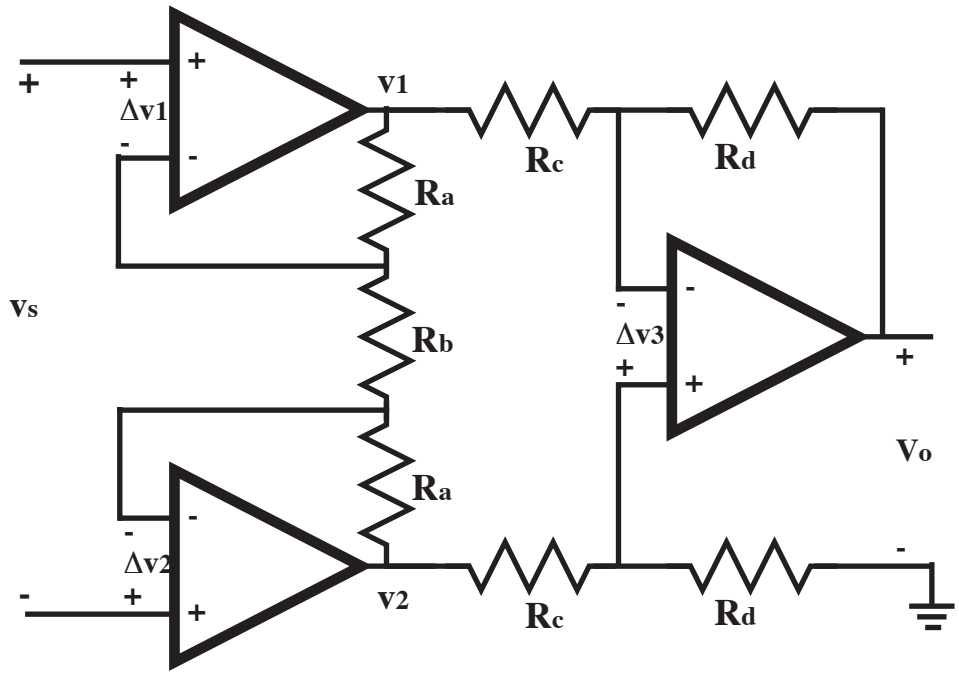

Consider each amplifier stage separately. The negative feedback drives Δv_1, Δv_2, and Δv_3 to zero and the OpAmp input currents are zero.

First Stage: Since Δv_1 and Δv_2 are zero, the voltage across resistor R_b is v_S. The current through the resistors R_a, R_b, and R_a are the same.

$$(v_{S1} - v_{S2})/R_b = v_S/R_b = (v_1 - v_2)/(2R_a + R_b)$$

So $$(v_1 - v_2) = [(2R_a + R_b)/R_b]\, v_S = [1 + 2(R_a/R_b)]\, v_S$$

Second Stage: Since Δv_3 is zero, the voltages v_{3+} and v_{3-} are equal.

$$v_{3+} = [R_d/(R_c + R_d)]\, v_2 \quad \text{(Voltage Division)} \quad \text{and}$$

$$(v_{3-} - v_1)/R_c + (v_{3-} - v_o)/R_d = 0 \quad \text{(KCL)}$$

$$v_{3-} = +\,[R_d/(R_c + R_d)]\, v_1 + [R_c/(R_c + R_d)]\, v_o$$

Then, since $v_{3+} = v_{3-}$, then

$$[R_d/(R_c + R_d)]\, v_2 = +\,[R_d/(R_c + R_d)]\, v_1 + [R_c/(R_c + R_d)]\, v_o$$

$$v_o = [R_c + R_d)/R_c]\, [R_d/(R_c + R_d)](v_2 - v_1)$$

$$v_o = (R_d/R_c)\, (v_2 - v_1)$$

Hence

$$v_o = -\,(R_d/R_c)\, [1 + 2(R_a/R_b)]\, v_S$$

VOLTAGE-TO-CURRENT OPAMP CIRCUIT AND ANALYSIS

Inverting OpAmp Circuit

- Input voltage and output feedback to (-) terminal through a resistive network
- Reference to (+) terminal
- OpAmp drives an npn BJT with a load resistor R_L

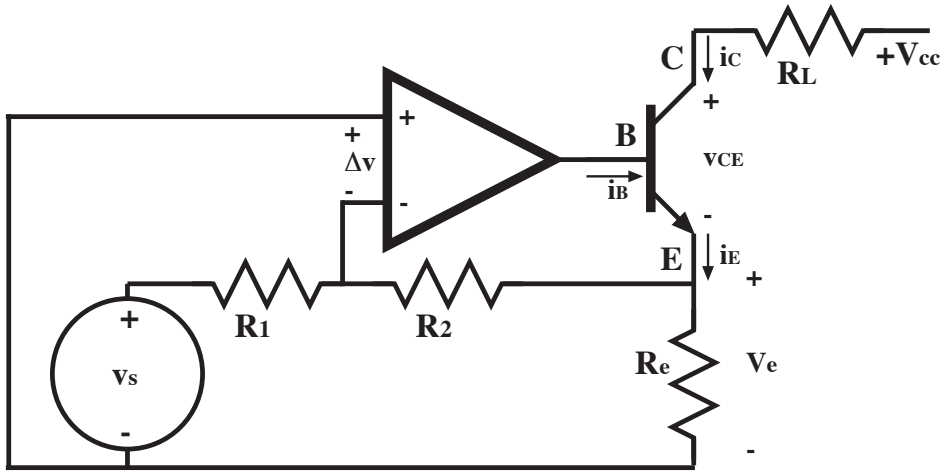

The negative feedback drives Δv to zero.

Kirchhoff's-Current-Law for the (-) terminal:

(Note that the OpAmp input current is zero)

$(-\Delta v - v_S)/R_1 + (-\Delta v - v_e)/R_2 = 0$ and $\Delta v = v_B/A = (v_e + v_{to})/A$

$[-(v_e + v_{to})/A - v_S]/R_1 + [-(v_e + v_{to})/A - v_e]/R_2 = 0$

$v_S/R_1 + v_{to}(1/AR_1 + 1/AR_2) = (-1/AR_1 - 1/AR_2 - 1/R_2)v_e$

$v_e = [v_S/R_1 + v_{to}(1/AR_1 + 1/AR_2)]/(-1/AR_1 - 1/AR_2 - 1/R_2)$

Hence,

$\lim_{A \text{ to } \infty} v_e = -(R_2/R_1)\, v_S$

For the BJT,

$i_E = v_e\,(1/R_2 + 1/R_e) = v_e/(R_2 \parallel R_e) = (R_2/R_1)\,[(R_2 + R_e)/R_2R_e]\,(-v_S)$

Note that proper biasing requires that $v_S < 0$.

For the Load Resistor (note that the current is independent of R_L),

$i_C = \alpha_o i_E = \alpha_o(R_2/R_1)\,[(R_2 + R_e)/R_2R_e]\,(-v_S)$

and

$V_L = R_L\, i_C$

NON-INVERTING OPAMP CIRCUIT WITH VARIABLE GAIN

Non-inverting OpAmp Circuit

- Input voltage to (+) terminal
- Output feedback to (-) terminal through a resistive network

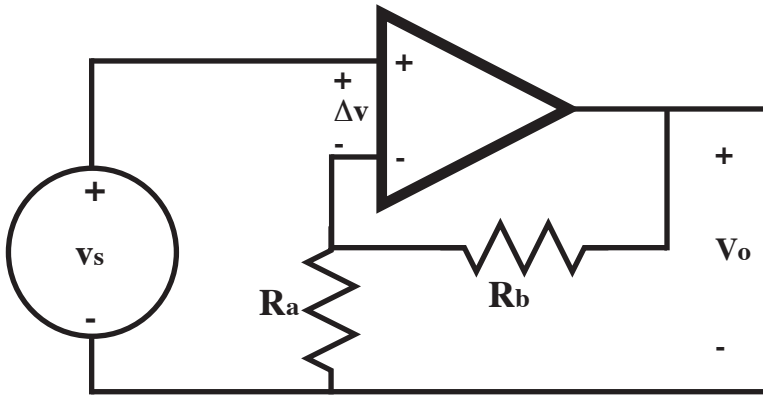

For resistors $R_a = wR_{Total}$ and $R_b = (1 - w)R_{Total}$ (note that $R_a + R_b = R_{Total}$)
where $0 < w < 1$

Let v_a be the voltage across R_a
Kirchhoff's-Voltage-Law for the left-hand loop:

$$- v_S + \Delta v + v_a = 0 \quad \text{or } v_a = - \Delta v + v_S = - v_o/A + v_S$$

Voltage division for the right-hand loop: (Note that the OpAmp input current is zero)

$$v_a = [R_a /(R_a + R_b)]\ v_o = \{wR_{Total} /[wR_{Total} + (1 - w)R_{Total})]\}\ v_o$$

$$v_a = (wR_{Total} /R_{Total})\ v_o = w\ v_o$$

Hence,

$$v_a = - v_o/A + v_S = w\ v_o$$

$$v_S = [(1/A) + w]\ v_o$$

$$v_o/v_S = [(1/A) + w]^{-1}$$

$$\lim_{A \text{ to } \infty}\ v_o/v_S = 1/w$$

In the limit

$$v_o/v_S = 1/w$$

NON-INVERTING OPAMP CIRCUIT EXAMPLE

Non-inverting OpAmp Circuit

- Input voltage to (+) terminal
- Output feedback to (-) terminal through a resistive network

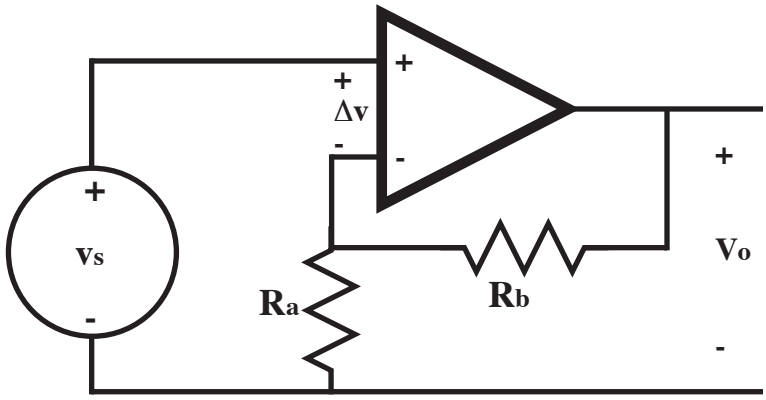

In the limit,

$v_o = (1 + R_b/R_a)v_S$

For an ideal-OpAmp amplification of 10, one set of external resistors are

$R_a = 1.00\ k\Omega$ and $R_b = 9.00\ k\Omega$

Then,

$v_o = [1 + (9000/1000)]v_S = (10.0)v_S$

By the previous analysis, with a finite A

$v_o = [1/A + R_a/(R_a + R_b)]^{-1}\ v_S$

Let A = 10,000, $R_a = 1.00\ k\Omega$, and $R_b = 9.00\ k\Omega$, then

$v_0 = \{(1/10{,}000) + [1000/(1000 + 9000)]\}^{-1}\ v_S$

$v_0 = (\ 0.1001)^{-1}\ v_S = (9.99)\ v_S$ and $\Delta v = v_o/A = (0.0001)\ v_o$

Let A = 100,000, $R_a = 1.00\ k\Omega$ and $R_b = 9.00\ k\Omega$, then

$v_0 = \{(1/100{,}000) + [1000/(1000 + 9000)]\}^{-1}\ v_S$

$v_0 = (\ 0.10001)^{-1}\ v_S = (9.999)\ v_S$ and $\Delta v = v_o/A = (0.00001)\ v_o$